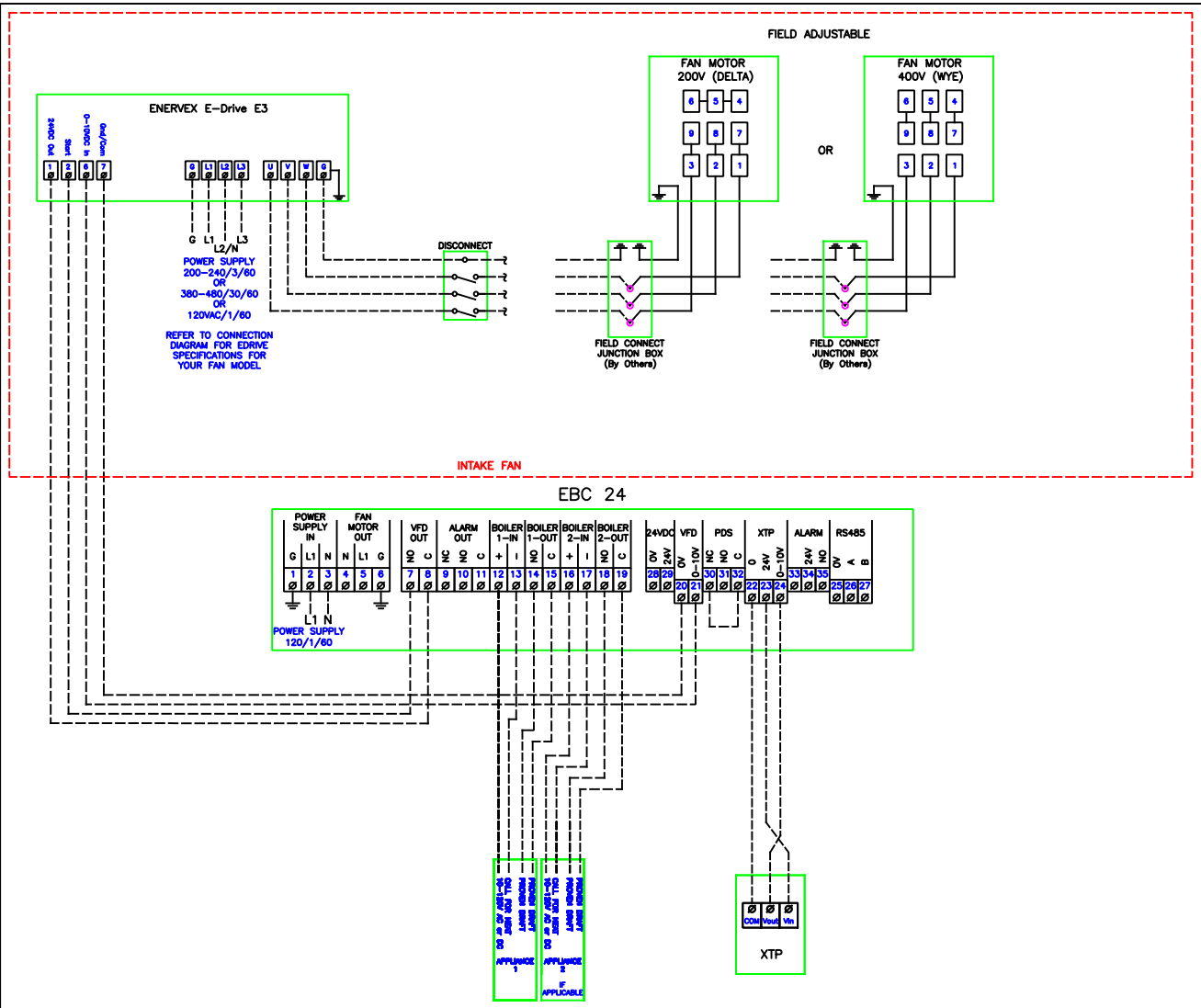

IMPORTANT: VERIFY ALL FAN MOTOR WIRING MATCHES OUTPUT VOLTAGE FROM EDRIVE (REFER TO THE CONNECTION DIAGRAM) POWER TO THE FAN MUST BE PROVIDED BY THE EDRIVE.

Note:

The wire sizes shown are typical and may not apply to all jobs. This system must be installed in compliance with the NFPA 70 National Electric Code and/or any local codes.

Not Connected — Connected

Factory Wired — Field Wired

PROPRIETARY AND CONFIDENTIAL

The information contained in this drawing is the sole property of ENERVEX, Inc. Any reproduction in part or as a whole with out the express written consent of ENERVEX, Inc. is prohibited.

NOT TO SCALE

ENERVEX®
GREEN BEFORE GREEN WAS IN

1685 Bluegrass Lakes Pkwy
Alpharetta, GA 30004
(770)587-3238
Fax (770)587-4731

TITLE: WIRING DIAGRAM		DATE: 2/2/2024
NAME: INTAKE ONLY - EBC 24 & SFTA		JOB #: GENERIC
DWG BY: AS	SHEET: 2 OF 2	REV: # 1